DATALOGIC

S62

The most complete universal sensor in a compact 50x50 mm housing

- Sensors with red, infrared LED or LASER emission
- Background suppression from 3 cm to 2 m
- Polarized retroreflective up to 20 m
- Multivoltage 24-240Vac/24-60Vdc with Relay output
- NPN/PNP output NO-NC configuration

SENSORS

APPLICATIONS

-Processing and Packaging machinery
-Conveyor lines, material handling

CE c UL us LISTED

S62		
Through beam		0...25 m
Retroreflective (on R2 reflector)		0,1...13 m
Polarized retroreflective		0,1...8 m 0,3...20 m (class 2 LASER)
Diffuse proximity		short 0...900 mm, long 0...2000 mm 0...900 mm (class 2 LASER)
Background suppression		short 30...300 mm medium 60...600 mm long 60...1200 mm very long 200...2000 mm short LASER 30...150 mm (class 2 LASER) long LASER 50...350 mm (class 2 LASER)
Power supply	Vdc	10...30 V
	Vac	
	Vac/dc	24/240 Vac/24...60 Vdc
Output	PNP	▪
	NPN	▪
	NPN/PNP	▪
	relay	▪
	other	
Connection	cable	▪
	connector	▪
	pig-tail	
Approximate dimensions (mm)		18x50x50
Housing material		ABS
Mechanical protection		IP67

TECHNICAL DATA	
Power supply	10 ... 30 Vdc (mod. S62...2/5) 24...240 Vac/ 24...60 Vdc (mod. S62...1)
Ripple	2 Vpp max. (mod. S62...2/5), 10% max. (mod. S62...1)
Consumption (output current excluded)	30 mA max. (mod. S62...2/5) 3 VA max. (mod. S62...1)
Light emission	red LED 640 nm (mod. S62-PA...A/B/C/G/M01/M05/M11/M15) IR LED 880 nm (mod. S62-PA...M21/M25/M31/M35) red Laser 645...665 nm (mod. S62-PL)
Setting	sensititivity adjustment trimmer
Operating mode	mono-turn LIGHT/DARK trimmer (mod. S62...RX/PN)
Indicators	yellow OUTPUT LED green STABILITY LED, POWER LED (S62...G)
Output	PNP or NPN N.O./N.C. (mod. S62...PP/NN); NPN/PNP (mod. S62...PN); electromechanical SPDT 250 Vac/30 Vdc (mod. S62...RX)
Output current	100 mA max. (mod. S62...2/5), 2 A max. (mod. S62...1)
Saturation voltage	2 V max. (mod. S62...2/5)
Response time	25 ms (mod. S62...1) 1,5 ms (mod. S62...M3x) 1 ms (mod. S62...2/5-F/G/M2x) 500 µs (mod. S62-PA...2/5-A/B/C/M0x/M1x) 200 µs (mod. S62-PL...B/C/M11) 140 µs (mod. S62-PL...M01)
Switching frequency	20 Hz (mod. S62...1) 330 Hz (mod. S62...M3x) 500 Hz (mod. S62...2/5-F/G/M2x) 1 kHz (mod. S62-PA...2/5-A/B/C/M0x/M1x) 2,5 kHz (mod. S62-PL...B/C/M11) 3,5 kHz (mod. S62-PL...M01)
Connection	M12 4-pole connector, 2 m Ø 4 mm cable vers., 2 m Ø 5 mm cable vers.
Dielectric strength	500 Vac 1 min., between electronics and housing
Insulation resistence	>20 MΩ 500 Vdc, between electronics and housing
Mechanical protection	IP67
Ambient light rejection	According to EN 60947-5-2
Vibrations	0.5 mm amplitude, 10 ... 55 Hz frequency, for each axis (EN60068-2-6)
Shock resistence	11ms (30G) 6 shock for every axis (EN60068-2-27)
Housing material	ABS
Lens material	PMMA window, policarbonate lens
Operating temperature	-10 ... 55 °C
Storage temperature	-20 ... 70 °C
Weight	40 g max. conn. vers., 90 max. cable vers.

DIMENSIONS

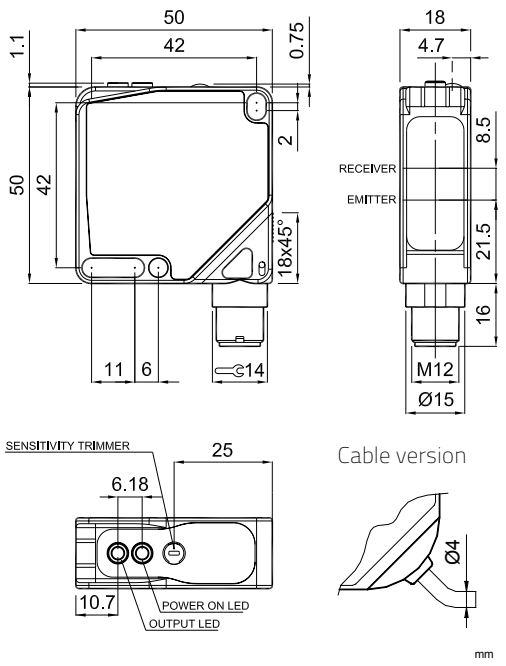

Background suppression

Laser version

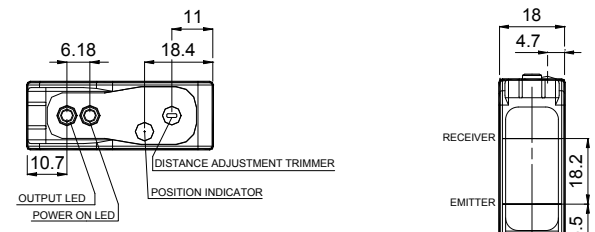

Led version

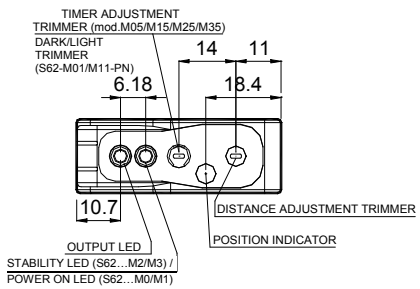

CONNECTIONS

VDC MODELS

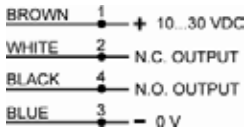

Through beam emitter

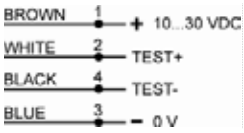

NPN/PNP version

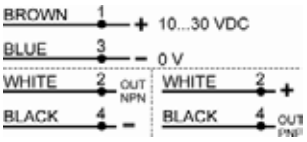

M12 CONNECTOR

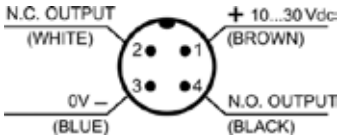

VAC MODELS

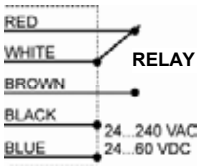

Through beam emitter

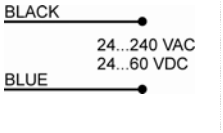

INDICATORS AND SETTINGS

S62-B

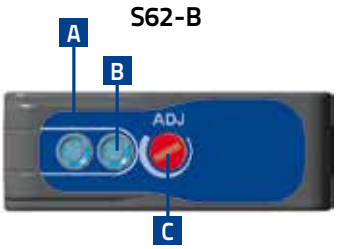

S62-M WITH TIMER

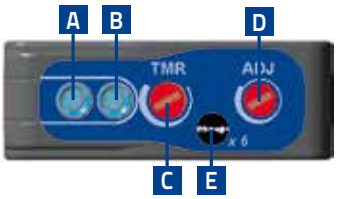

S62-M W/O TIMER

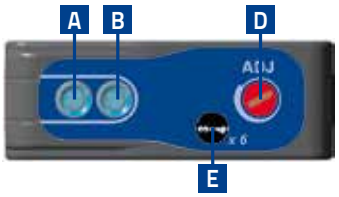

- **A** Output status LED
- **B** Stability LED or Power ON LED (laser vers.)
- **C** Timer adjustment trimmer
- **D** Distance adjustment trimmer
- **E** Geared numeric scale
- **F** M12 connector output
- **G** Cable output

DETECTION DIAGRAMS OF MODELS WITH LED EMISSION

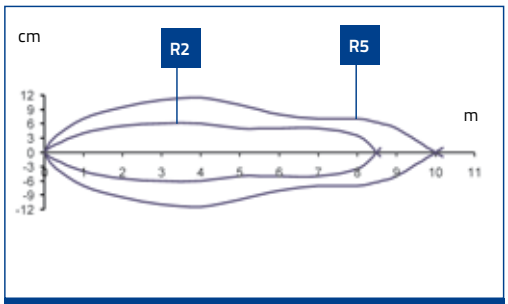

Polarized retroreflective

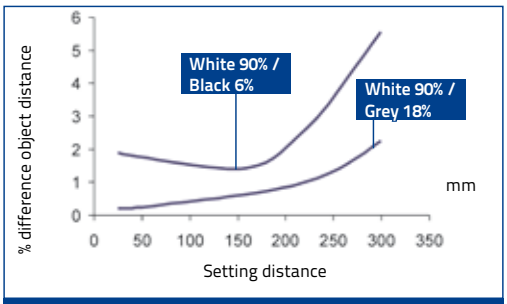

30 ... 300 mm background suppression

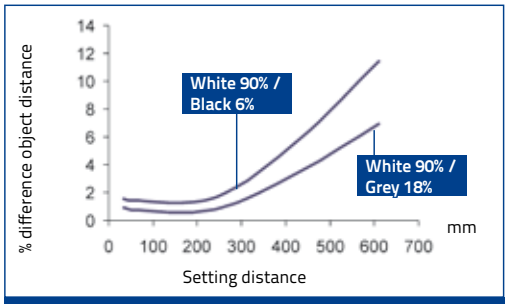

60 ... 600 mm background suppression

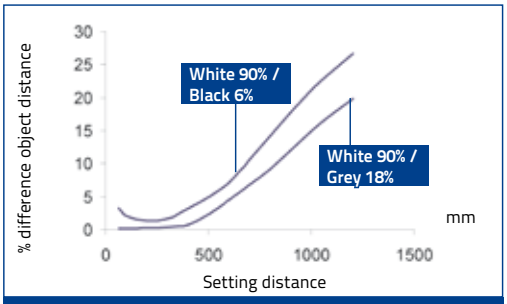

60 ... 1200 mm background suppression

200 ... 2000 mm background suppression

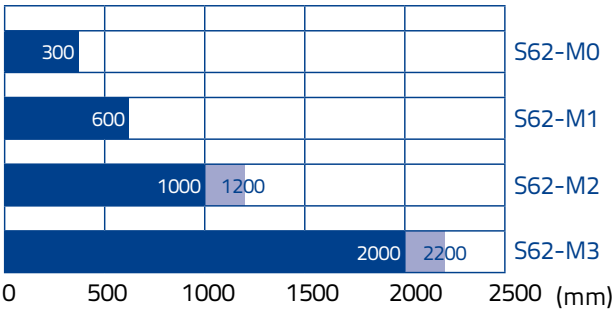

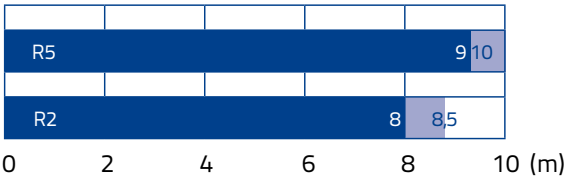

Recommended operating distance

Maximum operating distance

DETECTION DIAGRAMS OF MODELS WITH LASER EMISSION

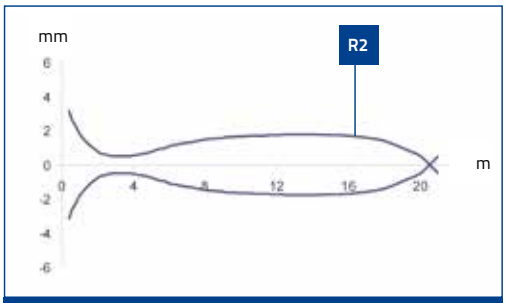

Laser polarized retroreflective

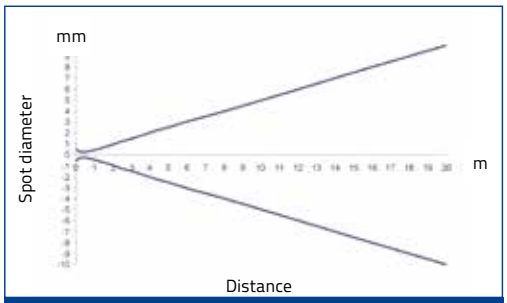

Light spot dimension - Laser polarized retroreflective

30 ... 150 mm laser background suppression

50 ... 350 mm laser background suppression

Reflector operating distances (m)				
R1	R2	R6	R7 / R20	R8
0.3 ... 16	0.3 ... 20	0.4 ... 22	0.3 ... 22	0.2 ... 2
The use of the RT3970 reflecting tape is suggested.				

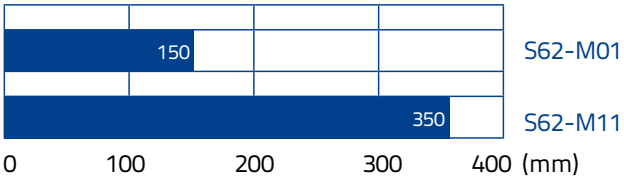

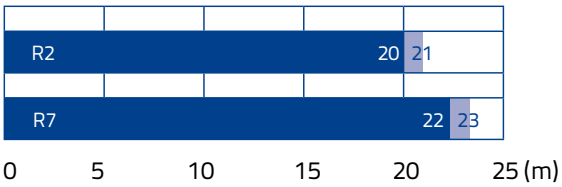

Recommended operating distance

Maximum operating distance

MODEL SELECTION AND ORDER INFORMATION

OPTIC FUNCTION	EMISSION	CONNECTION	OUTPUT	MODEL	ORDER No.
Retroreflective	LED (red 640nm)	2m Cable	PNP/NPN	S62-PA-2-A01-PN	956211240
		M12 Connector	PNP/NPN	S62-PA-5-A01-PN	956211310
		Vac relay	Relay	S62-PA-1-A01-RX	956211180
Polarized retroreflective	LED (red 640nm)	2m Cable	PNP/NPN	S62-PA-2-B01-PN	956211250
			PNP	S62-PA-2-B01-PP	956211010
		M12 Connector	NPN	S62-PA-5-B01-NN	956211020
			PNP/NPN	S62-PA-5-B01-PN	956211320
			PNP	S62-PA-5-B01-PP	956211000
		Vac relay	Relay	S62-PA-1-B01-RX	956211190
	LASER	M12 Connector	NPN	S62-PL-5-B01-NN	956211100
			PNP	S62-PL-5-B01-PP	956211110
Short diffused proximity	LED (red 640nm)	2m Cable	NPN	S62-PA-2-C01-NN	956211420
			PNP/NPN	S62-PA-2-C01-PN	956211260
			PNP	S62-PA-2-C01-PP	956211380
		M12 Connector	NPN	S62-PA-5-C01-NN	956211500
			PNP/NPN	S62-PA-5-C01-PN	956211330
			PNP	S62-PA-5-C01-PP	956211460
		Vac relay	Relay	S62-PA-1-C01-RX	956211200
	LASER	2m Cable	NPN	S62-PL-2-C01-NN	956211440
			PNP	S62-PL-2-C01-PP	956211400
		M12 Connector	NPN	S62-PL-5-C01-NN	956211520
			PNP	S62-PL-5-C01-PP	956211480
Long diffused proximity	LED (red 640nm)	2m Cable	NPN	S62-PA-2-C11-NN	956211430
			PNP/NPN	S62-PA-2-C11-PN	956211270
			PNP	S62-PA-2-C11-PP	956211390
		M12 Connector	NPN	S62-PA-5-C11-NN	956211510
			PNP/NPN	S62-PA-5-C11-PN	956211340
			PNP	S62-PA-5-C11-PP	956211470
		Vac relay	Relay	S62-PA-1-C11-RX	956211210
Through beam receiver	-	2m Cable	NPN	S62-PA-2-F01-NN	956211450
			PNP/NPN	S62-PA-2-F01-PN	956211290
			PNP	S62-PA-2-F01-PP	956211410
		M12 Connector	NPN	S62-PA-5-F01-NN	956211530
			PNP/NPN	S62-PA-5-F01-PN	956211360
			PNP	S62-PA-5-F01-PP	956211490
		Vac relay	Relay	S62-PA-1-F01-RX	956211220
Through beam emitter	LED (red 640nm)	2m Cable	-	S62-PA-2-G00-XG	956211300
		M12 Connector		S62-PA-5-G00-XG	956211370
		Vac relay		S62-PA-1-G00-XX	956211230
Background suppression (short distance)	LED (red 640nm)	2m Cable	PNP/NPN	S62-PA-2-M01-PN	956211280
			PNP	S62-PA-2-M01-PP	956201841
		M12 Connector	NPN	S62-PA-5-M01-NN	956201811
			PNP/NPN	S62-PA-5-M01-PN	956211350
			PNP	S62-PA-5-M01-PP	956201831
			NPN	S62-PA-5-M05-NN	956201801
			PNP	S62-PA-5-M05-PP	956201821
	LASER	M12 Connector	NPN	S62-PL-5-M01-NN	956211120
			PNP	S62-PL-5-M01-PP	956211130
Background suppression (medium distance)	LED (red 640nm)	2m Cable	PNP	S62-PA-2-M11-PP	956201891
		M12 Connector	NPN	S62-PA-5-M11-NN	956201861
			PNP	S62-PA-5-M11-PP	956201881
			NPN	S62-PA-5-M15-NN	956201851
			PNP	S62-PA-5-M15-PP	956201871
	LASER	M12 Connector	NPN	S62-PL-5-M11-NN	956211140
			PNP	S62-PL-5-M11-PP	956211150
Background suppression (long distance)	LED (infrared 880nm)	2m Cable	PNP	S62-PA-2-M21-PP	956201940
		M12 Connector	NPN	S62-PA-5-M21-NN	956201910
			PNP	S62-PA-5-M21-PP	956201900
			NPN	S62-PA-5-M25-NN	956201930
			PNP	S62-PA-5-M25-PP	956201920
Background suppression (very long distance)		2m Cable	PNP	S62-PA-2-M31-PP	956211050
		M12 Connector	NPN	S62-PA-5-M31-NN	956211060
			PNP	S62-PA-5-M31-PP	956211070
			NPN	S62-PA-5-M35-NN	956211080
			PNP	S62-PA-5-M35-PP	956211090

ACCESSORIES

ST-504

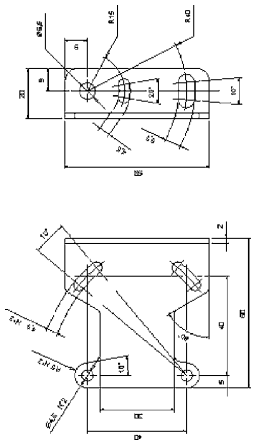

ST-5020

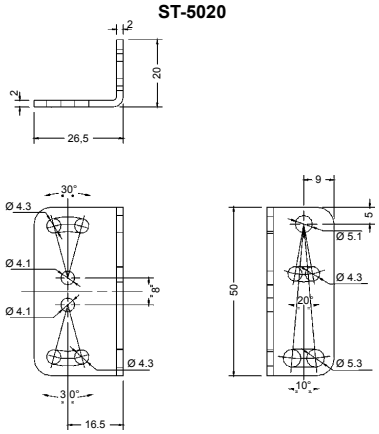

ST-5021

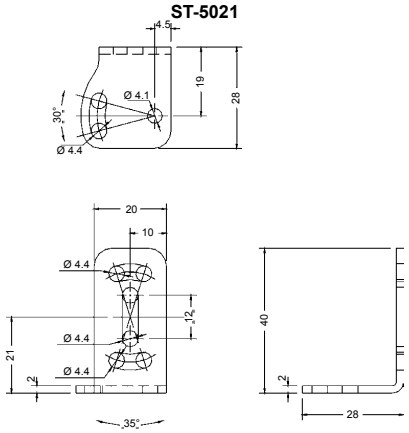

ST-5053

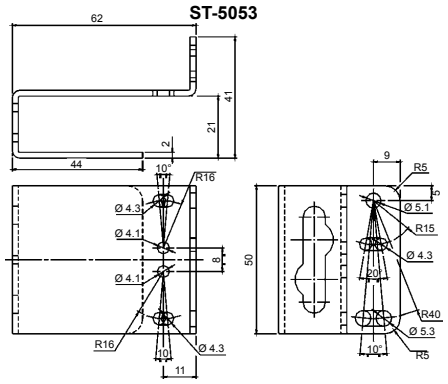

ST-5054

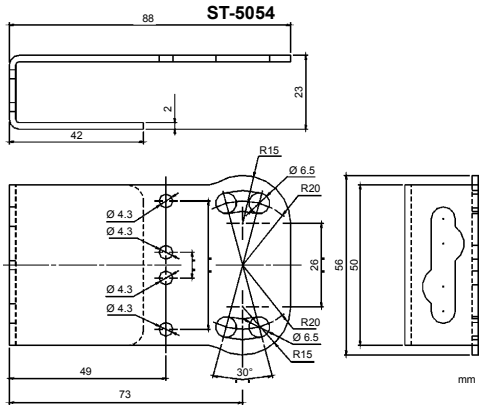

ST-5018

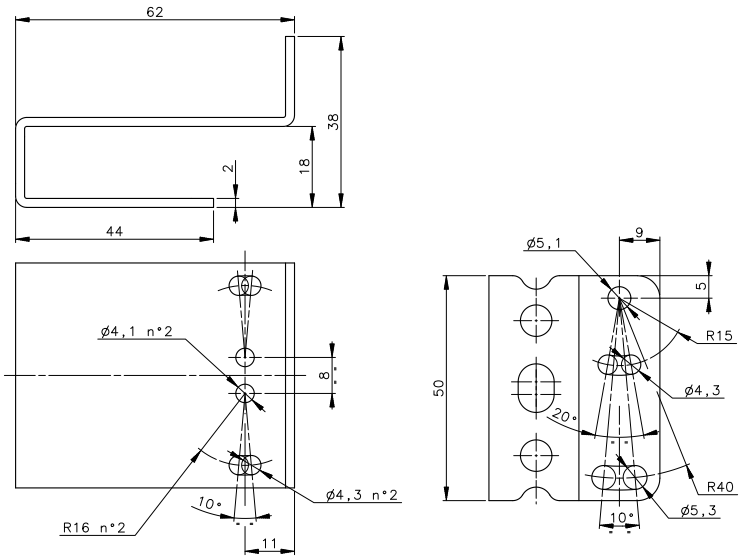

ST-5019

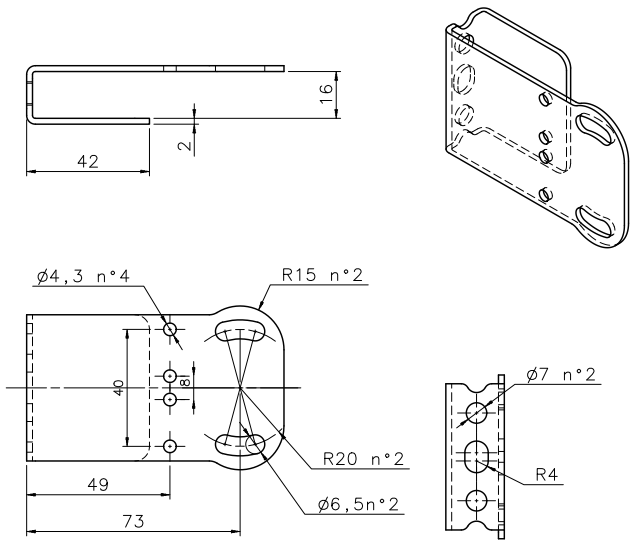

MODEL	DESCRIPTION	ORDER No.
ST-5018	protective bracket	95ACC5310
ST-5019	protective bracket	95ACC5320
ST-5020	mounting bracket	95ACC5330
ST-5021	mounting bracket	95ACC5340
ST-504	mounting bracket	95ACC2820
ST-5053	protective bracket	95ACC2410
ST-5054	protective bracket	95ACC2420
JOINT-S62	protective bracket with jointed support	95ACC2430

CABLES

TYPE	DESCRIPTION	LENGTH	MODEL	ORDER No.
Axial M12 Connector	4-pole, grey, P.V.C.	3 m	CS-A1-02-G-03	95A251380
		5 m	CS-A1-02-G-05	95A251270
		7 m	CS-A1-02-G-07	95A251280
		10 m	CS-A1-02-G-10	95A251390
	4-pole, P.U.R.	2 m	CS-A1-02-R-02	95A251540
		5 m	CS-A1-02-R-05	95A251560
Radial M12 Connector	4-pole, grey, P.V.C.	3 m	CS-A2-02-G-03	95A251360
		5 m	CS-A2-02-G-05	95A251240
		7 m	CS-A2-02-G-07	95A251245
		10 m	CS-A2-02-G-10	95A251260
	4-pole, P.U.R.	2 m	CS-A2-02-R-02	95A251550
		5 m	CS-A2-02-R-05	95A251570
Radial M12 Connector with LED (for PNP N.O. sensors)	4-pole, grey, P.V.C.	3 m	CS-A2-12-G-03	95A251400
		5 m	CS-A2-12-G-05	95A251350
		10 m	CS-A2-12-G-10	95A251370
Axial M12 Connector	4-pole, shielded, black, P.V.C.	3 m	CV-A1-22-B-03	95ACC1480
		5 m	CV-A1-22-B-05	95ACC1490
		10 m	CV-A1-22-B-10	95ACC1500
		15 m	CV-A1-22-B-15	95ACC2070
		25 m	CV-A1-22-B-25	95ACC2090
Radial M12 Connector		3 m	CV-A2-22-B-03	95ACC1540
		5 m	CV-A2-22-B-05	95ACC1550
		10 m	CV-A2-22-B-10	95ACC1560
Axial M12 Connector	4-pole, U.L., black, P.V.C.	3 m	CS-A1-02-U-03	95ASE1120
		5 m	CS-A1-02-U-05	95ASE1130
		10 m	CS-A1-02-U-10	95ASE1140
		15 m	CS-A1-02-U-15	95ASE1150
		25 m	CS-A1-02-U-25	95ASE1160
	4-pole, black	Connector- not cabled	CS-A1-02-B-NC	G5085002
Radial M12 Connector		Connector- not cabled	CS-A2-02-B-NC	G5085003